SD-POS-HA
SD-POS-HA-B2B

Technical Specification

spacedec

Display | POS Height Adjustable

Dimensions

NOTE:

! This product has been designed to mount VESA compliant displays with 75mmx75mm and 100mmx100mm hole patterns only.
! It will support displays upto a maximum weight of 20kg (44lbs). The Back-to-Back Mount will support 2x20kg (88lbs) displays.
! Warranty: 10 years limited

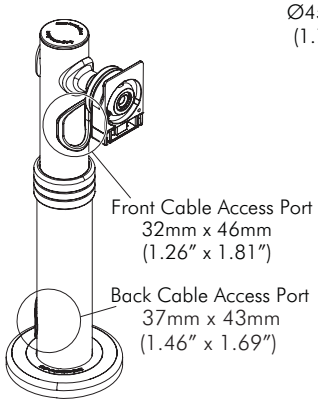

NOTE: If cable access through the post and work surface is required, you will need to drill a Ø45mm Cable Access Hole (refer to Installation Instructions).

NOTE: The minimum thickness of the mounting surface is 15mm (0.59″) when using the manufacturer supplied hardware.

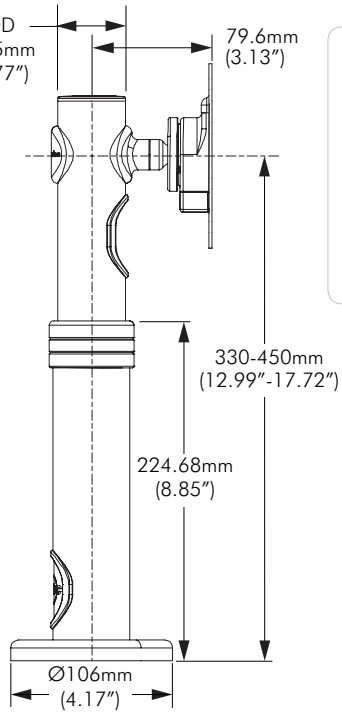

Mounting Hole Options

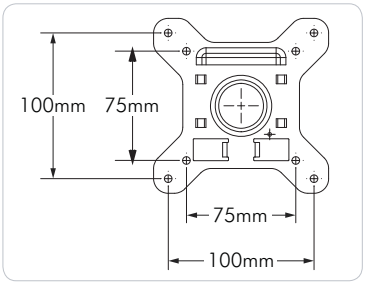

Back to Back Mount

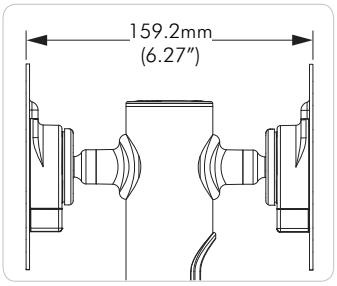

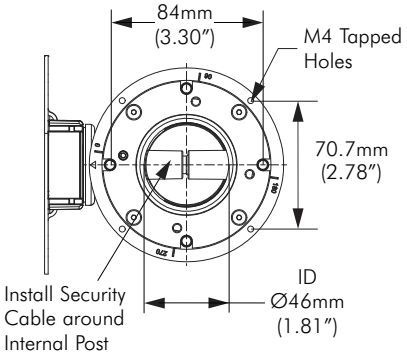

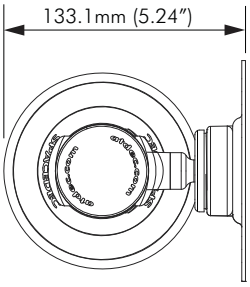

Mounting Plate Footprint

Mounting Options

Your SD-POS-HA offers 355° of Rotation. This can also be limited to suit a specific application. The direction in which you mount SD-POS-HA will determine where the 5° gap in rotation is located, and how you choose to limit the rotation.

Rotation Options
0° Rotation (Fixed)
0-90° Rotation
0-180° Rotation
0-270° Rotation
0-355° Rotation

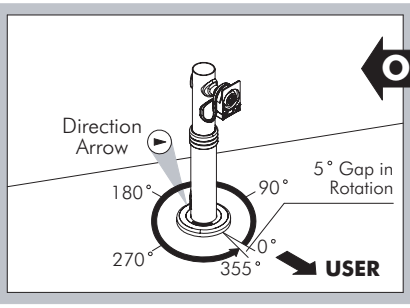

OR

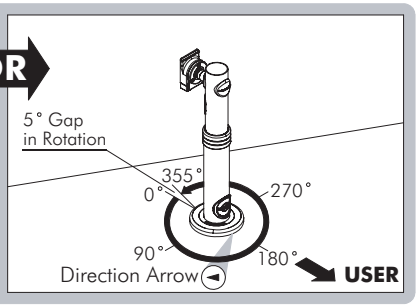

LOCKING HOLES (Refer to Installation Instructions for further details)

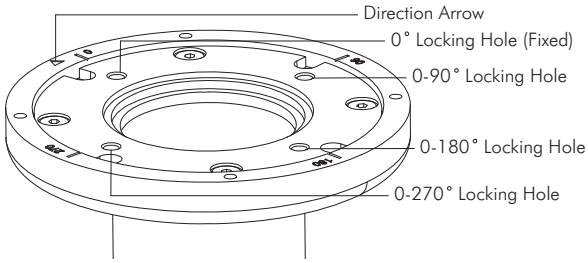

VESA Ball Mount

Each Ball Assembly has a 40° range of movement.

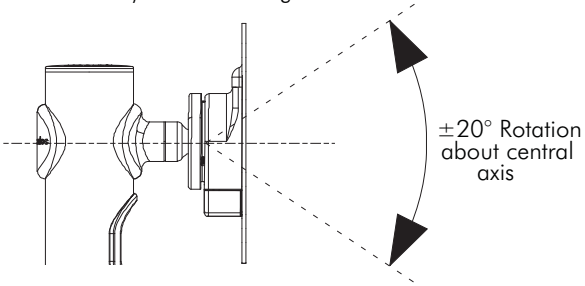

No portion of this document or any artwork contained herein should be reproduced in any way without the express written consent of Atdec Pty Ltd.
Due to continuing product development, the manufacturer reserves the right to alter specifications without notice. Published 08.02.12©